DRAG2ZERO

DRAG2ZERO.66 AeroBib

Assembly

This document details the assembly steps for your custom .66 AeroBib.

Parts included in your .66 AeroBib order;

- •. 66 Custom AeroBib
- • AeroBib attachments for the .66 pole
- •. 66 AeroBib Computer mount
- • Carbon Fibre AeroBib supports
- • AeroBib DUAL BTA Rail - Optional



Step 1 - Remove armrests, computer mount and BTA mount if using. Setup should then look like the image below.



Step 2 - Fix AeroBib blanking panel into 66 pole pockets. Use M4 x 16mm countersunk bolts. Torque to 3Nm



Step 3 - Remove the side VHB Pad sticky backing from AeroBib and clip AeroBib between poles. Fix into place using the supplied M5 12 mm button-head bolts. Torque to 3Nm



Step 4 -Slide the carbon bracket into position and fix using the supplied M5 6mm countersunk bolts. Torque to 3Nm.

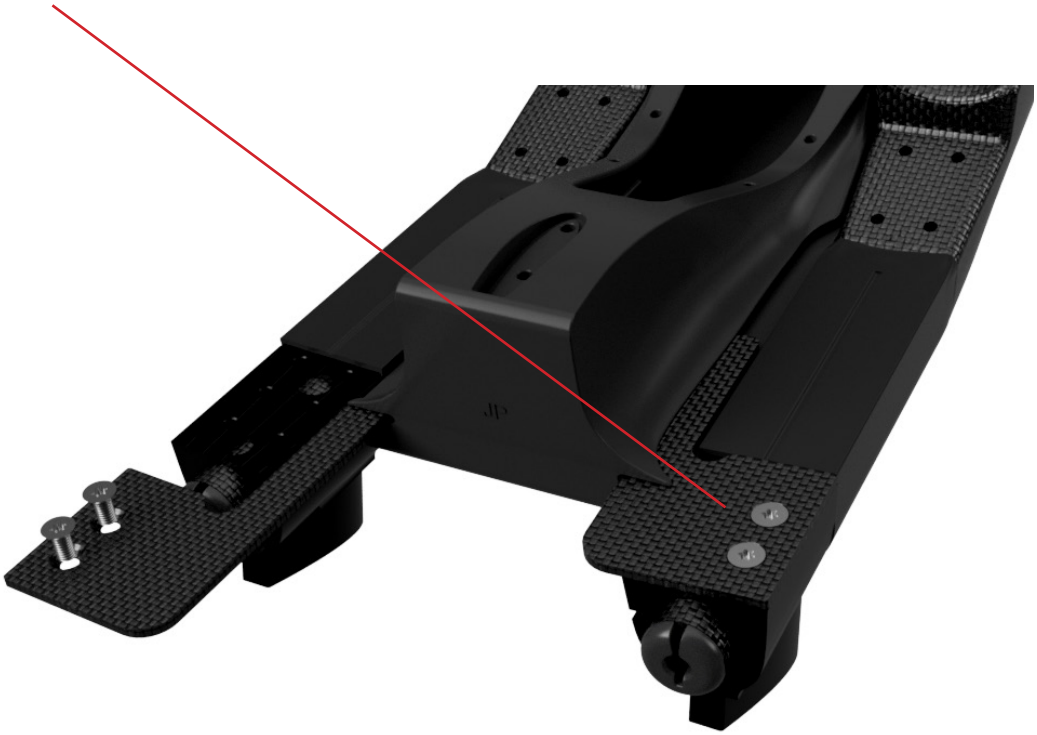

Step 5 - Fix the armrests back into place. Torque to 5Nm.



Step 6 - Fix the AeroBib Dual BTA system into place using the supplied M4 20mm cap-head bolts. Torque to 3Nm. Fix bottle cages using the supplied M5 barrel nuts and M5 13mm button-head screws. Torque to 3Nm.

